LEGMT-160B

nikpol™

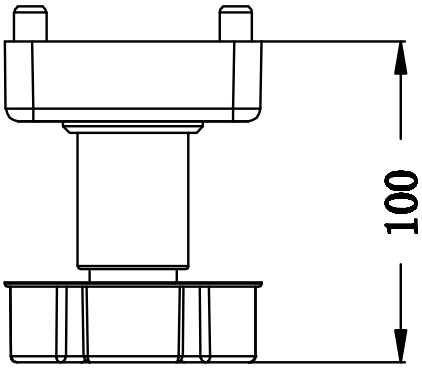

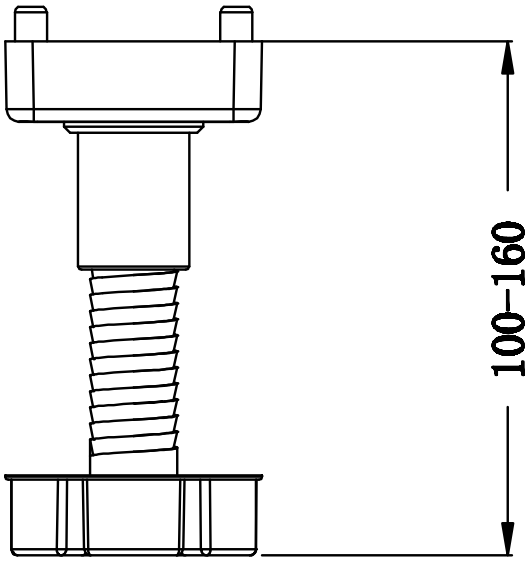

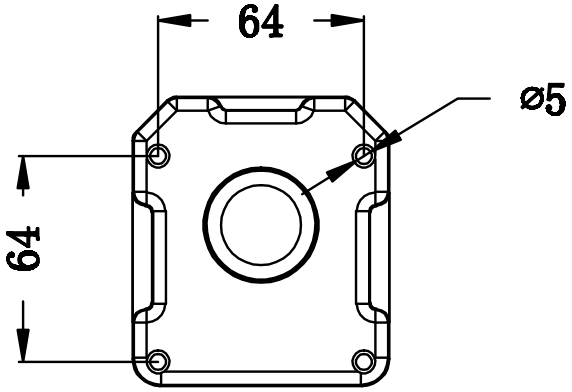

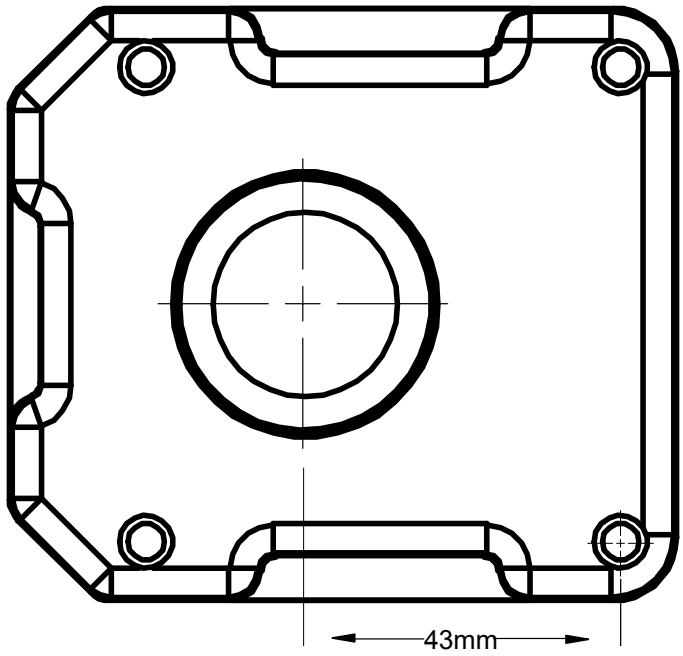
43mm

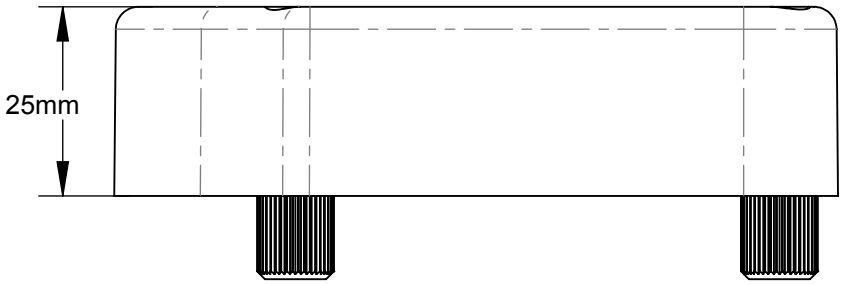
25mm

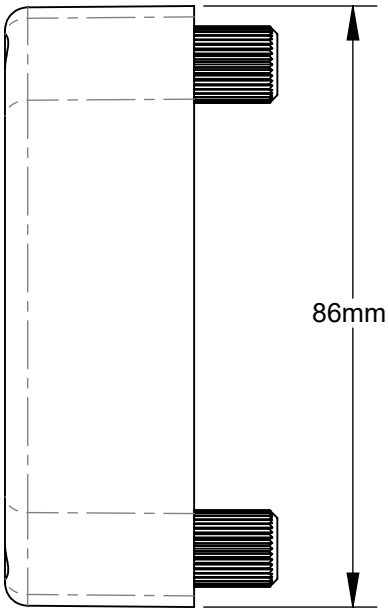
86mm

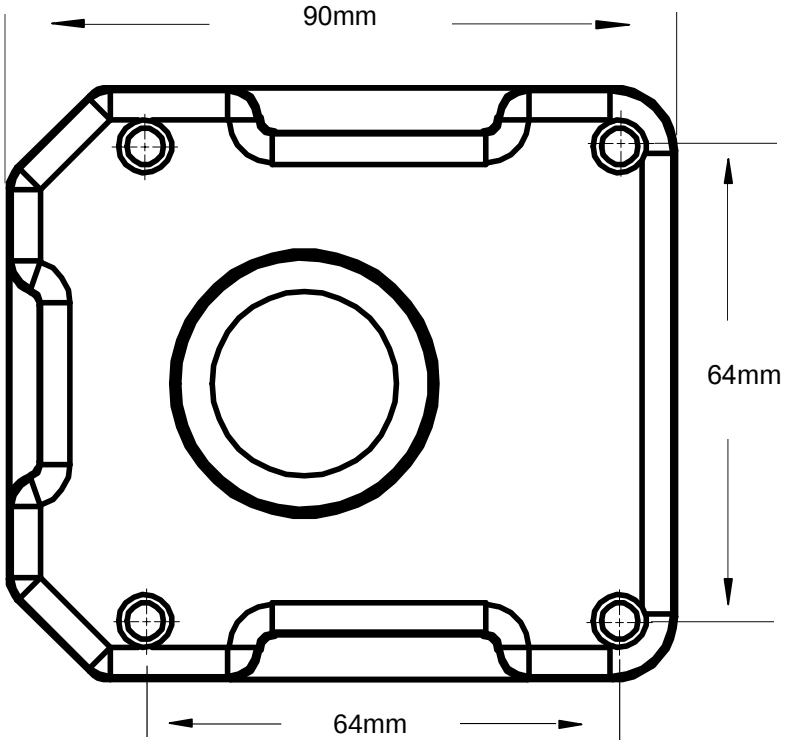
90mm
64mm
64mm